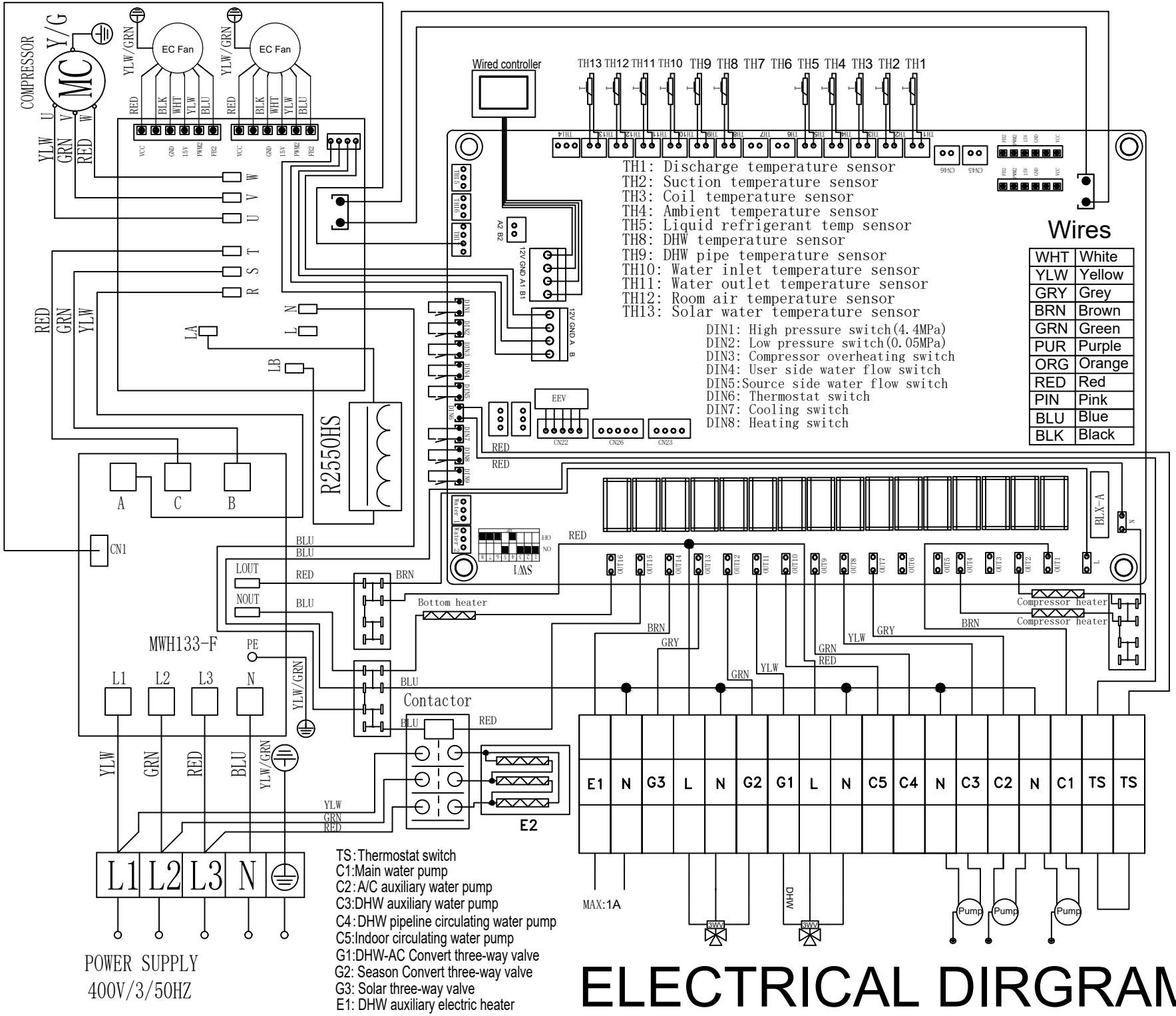
COMPRESSOR
MC
Y/G
YLW
GRN
RED
U
V
W
EC Fan
EC Fan
YLW/GRN
RED
BLK
WHT
YLW
BLU
VCC
GND
15V
PWM2
FR2
Wired controller
TH13 TH12 TH11 TH10 TH9 TH8 TH7 TH6 TH5 TH4 TH3 TH2 TH1
TH1: Discharge temperature sensor
TH2: Suction temperature sensor
TH3: Coil temperature sensor
TH4: Ambient temperature sensor
TH5: Liquid refrigerant temp sensor
TH8: DHW temperature sensor
TH9: DHW pipe temperature sensor
TH10: Water inlet temperature sensor
TH11: Water outlet temperature sensor
TH12: Room air temperature sensor
TH13: Solar water temperature sensor
DIN1: High pressure switch(4.4MPa)
DIN2: Low pressure switch(0.05MPa)
DIN3: Compressor overheating switch
DIN4: User side water flow switch
DIN5:Source side water flow switch
DIN6: Thermostat switch
DIN7: Cooling switch
DIN8: Heating switch
Wires
WHT White
YLW Yellow
GRY Grey
BRN Brown
GRN Green
PUR Purple
ORG Orange
RED Red
PIN Pink
BLU Blue
BLK Black
A2 B2
12V GND A1 B1
12V GND A B
EEV
CN22
CN26
CN23
CN46
CN45
R2550HS
LA
LB
N
L
A
C
B
CN1
BLX-A
SW1
LOUT
NOUT
BRN
BLU
Bottom heater
Compressor heater
Compressor heater
MWH133-F
PE
L1
L2
L3
N
YLW/GRN
Contactor
E2
E1 N G3 L N G2 G1 L N C5 C4 N C3 C2 N C1 TS TS
MAX:1A
DHW
3WV
Pump
Pump
Pump
L1 L2 L3 N
POWER SUPPLY
400V/3/50HZ
TS:Thermostat switch
C1:Main water pump
C2:A/C auxiliary water pump
C3:DHW auxiliary water pump
C4:DHW pipeline circulating water pump
C5:Indoor circulating water pump
G1:DHW-AC Convert three-way valve
G2: Season Convert three-way valve
G3: Solar three-way valve
E1: DHW auxiliary electric heater
ELECTRICAL DIRGRAM